( ) Preliminary Specifications
( v ) Final Specifications

| | |
|---|---|
| **Module** | 19” Inch Color TFT-LCD |
| **Model Name** | G190ETN01.601 |

| | | | |
|---|---|---|---|
| **Customer** | **Date** | **Approved by** | **Date** |
| | | Flossie Chuang | 2022/11/09 |
| **Checked & Approved by** | **Date** | **Prepared by** | **Date** |
| | | Daniel Chang | 2022/11/09 |
| Customer’s sign back page | | General Display Business Division / AUO Display Plus Corporation | |

# Contents

**1. Operating Precautions ..... 4**
**2. General Description ..... 5**
2.1 Display Characteristics ..... 5
2.2 Optical Characteristics ..... 6
**3. Functional Block Diagram ..... 9**
**4. Absolute Maximum Ratings ..... 10**
4.1 Absolute Ratings of TFT LCD Module ..... 10
4.2 Absolute Ratings of Environment ..... 10
**5. Electrical Characteristics ..... 11**
5.1 TFT LCD Module ..... 11
5.2 Backlight Unit ..... 13
**6. Signal Characteristic ..... 15**
6.1 Pixel Format Image ..... 15
6.2 Scanning Direction ..... 錯誤! 尚未定義書籤。
6.3 Signal Description ..... 16
6.4 The Input Data Format ..... 18
6.5 Interface Timing ..... 19
6.6 Power ON/OFF Sequence ..... 21
**7. Reliability Test Criteria ..... 22**
**8. Mechanical Characteristics ..... 23**
8.1 LCM Outline Dimension ..... 23
**9. Label and Packaging ..... 24**
9.1 Shipping Label (on the rear side of TFT-LCD display) ..... 24
9.2 Carton Package ..... 24
9.3 Palletizing Sequence ..... 24

# Record of Revision

| Version | Date (yyyy/m/d) | Page | Old description | New Description |
|---|---|---|---|---|
| 0.1 | 2021/09/03 | All | First Preliminary Spec | |
| 0.2 | 2021/11/30 | P13 | **5.2 Backlight Unit**<br>• **5.2.1 LED Backlight Unit : Driver Connector**<br>Physical interface is described as for the connector on module. These connectors are capable of accommodating the following signals and will be following components.<br>Connector Name / Designation: Lamp Connector<br>Manufacturer: CviLux<br>Connector Model Number: MS240110RHD<br>Mating Model Number: P240110H or compatible | **5.2 Backlight Unit**<br>• **5.2.1 LED Backlight Unit : Driver Connector**<br>Physical interface is described as for the connector on module. These connectors are capable of accommodating the following signals and will be following components.<br>Connector Name / Designation: Lamp Connector<br>Manufacturer: STM<br>Connector Model Number: MS240110RHD<br>Mating Model Number: P240110H or compatible |
| | | P14 | Symbol / Parameter / Min / Typ / Max / Unit / Remark<br>Vcc / Input Voltage / 10.8 / 12 / 13.2 / Volt / -<br>Ivcc / Input Current / - / 2.60 / - / A / VCC=12V, Ta=25 ℃ at 100%<br>PLED / Power Consumption / - / 34 / 39 / Watt / VCC=12V, Ta=25 ℃ at 100%<br>Inrush / Inrush Current / - / - / TBD / A / -<br>VLED on/off / On Control Voltage / 2 / 3.3 / 5 / Volt / Back light on/off<br>Off Control Voltage / 0 / - / 0.6 / Volt<br>EPWM / PWM Dimming Frequency / 200 / - / 20K / Hz / -<br>High Voltage / 2 / 3.3 / 5 / Volt / -<br>Low Voltage / 0 / - / 0.6 / Volt / -<br>Dimming Duty Cycle / 20 / - / 100 / % / -<br>IF / LED Forward Current / - / 75 / - / mA / Ta = 25°C (per string) | • **5.2.3 Backlight input signal characteristics**<br>Symbol / Parameter / Min. / Typ. / Max. / Unit / Remark<br>Vcc / Input Voltage / 10.8 / 12 / 13.2 / Volt / -<br>Ivcc / Input Current / - / 2.60 / - / A / VCC=12V, Ta=25 ℃ at 100%<br>PLED / Power Consumption / - / 34 / 39 / Watt / VCC=12V, Ta=25 ℃ at 100%<br>Inrush / Inrush Current / - / - / TBD / A / -<br>VLED on/off / On Control Voltage / 2 / 3.3 / 5 / Volt / Back light on/off<br>Off Control Voltage / 0 / - / 0.6 / Volt<br>EPWM / PWM Dimming Frequency / 200 / - / 20K / Hz / -<br>High Voltage / 2 / 3.3 / 5 / Volt / -<br>Low Voltage / 0 / - / 0.6 / Volt / -<br>Dimming Duty 200~5K / 5 / - / 100 / % / -<br>Dimming Duty 5K~20K / 15 / - / 100 / % / -<br>IF / LED Forward Current / - / 75 / - / mA / Ta = 25°C (per string) |
| | | P19 | Signal / Symbol / Min. / Typ. / Max. / Unit<br>Clock / Period / Tclk / 44 / 54 / 67.5 / MHz<br>Frequency / Freq. / 22.2 / 18.52 / 14.81 / ns<br>Vertical Section / Period / TV / 1032 / 1066 / 1150 / TLine<br>Active / TVD / 1024 / 1024 / 1024<br>Blanking / TVB / 8 / 42 / 126<br>Horizontal Section / Period / TH / 780 / 844 / 2047 / TClock<br>Active / THD / 640 / 640 / 640<br>Blanking / THB / 140 / 204 / --<br>Frame Rate / F / 49 / 60 / 75 / Hz<br>Note : DE mode only. | Signal / Symbol / Min. / Typ. / Max. / Unit<br>Clock / Period / Tclk / 22.2 / 18.52 / 14.81 / ns<br>Frequency / Freq. / 44 / 54 / 67.5 / MHz<br>Vertical Section / Period / TV / 1032 / 1066 / 1150 / TLine<br>Active / TVD / 1024 / 1024 / 1024<br>Blanking / TVB / 8 / 42 / 126<br>Horizontal Section / Period / TH / 780 / 844 / 2047 / TClock<br>Active / THD / 640 / 640 / 640<br>Blanking / THB / 140 / 204 / --<br>Frame Rate / F / 49 / 60 / 75 / Hz |
| 1.0 | 20221109 | P1 | Preliminary spec | Final Spec |
| | | P24 | **9. Label and Packaging**<br>**9.1 Shipping Label** (on the rear side of TFT-LCD display)<br>Manufactured XX/XX<br>Model No: G190ETN01.6<br>AU Optronics<br>MADE IN XXXXXX (XX)<br>*XXXXXXXXXXXX-XXXXX*<br>P/N: XXXXXXXX FRU:XXXXXXX<br>XXXXXXXXXXXXXXXXXXXXX | AUO Display Plus<br>ADP NO: G190ETN01.6<br>Manufactured XX/XX<br>Model No: G190ETN01.6<br>AUO Corporation<br>MADE IN XXXXXX (XXX)<br>*XXXXXXXXXXXX-XXXXX*<br>23 mm<br>90 mm |
| | | **P6** | **2.2 Optical Characteristics**<br>The optical characteristics are measured under stable conditions at 25 °C (Room Temperature):<br>Item / Unit / Conditions / Min. / Typ. / Max. / Note<br>White Luminance / cd/m² / ILED=75mA(center point) / 1280 / 1600 / -- / 1<br>Uniformity / % / 9 points / 75 / 80 / -- / 2,3<br>Contrast Ratio / -- / - / 600 / 1000 / -- / 4<br>Response Time / msec / Rising / -- / -- / -- / 5<br>Falling / -- / -- / -- / -- / -- / -- / -- / 5<br>Rising + Falling / -- / 10 / 20 / -- / 5<br>Viewing Angle / degree / Horizontal CR >= 10 (Right) / 75 / 85 / -- / 6<br>(Left) / 75 / 85 / -- / 6<br>Vertical CR >= 5 (Upper) / 70 / 80 / -- / 6<br>(Lower) / 70 / 80 / -- / 6<br>Color / Chromaticity Coordinates (CIE 1931) / -- / Red x / TBD / TBD / TBD / 4<br>Red y / TBD / TBD / TBD<br>Green x / TBD / TBD / TBD<br>Green y / TBD / TBD / TBD<br>Blue x / TBD / TBD / TBD<br>Blue y / TBD / TBD / TBD<br>White x / 0.260 / 0.310 / 0.360<br>White y / 0.270 / 0.320 / 0.370<br>Color Gamut / % / - / - / 70 / - / - | **2.2 Optical Characteristics**<br>The optical characteristics are measured under stable conditions at 25 °C (Room Temperature):<br>Item / Unit / Conditions / Min. / Typ. / Max. / Note<br>White Luminance / cd/m² / ILED=75mA(center point) / 1280 / 1600 / -- / 1<br>Uniformity / % / 9 points / 75 / 80 / -- / 2,3<br>Contrast Ratio / -- / - / 600 / 1000 / -- / 4<br>Response Time / msec / Rising / -- / -- / -- / 5<br>Falling / -- / -- / -- / -- / -- / -- / -- / 5<br>Rising + Falling / -- / 10 / 20 / -- / 5<br>Viewing Angle / degree / Horizontal CR >= 10 (Right) / 75 / 85 / -- / 6<br>(Left) / 75 / 85 / -- / 6<br>Vertical CR >= 5 (Upper) / 70 / 80 / -- / 6<br>(Lower) / 70 / 80 / -- / 6<br>Color / Chromaticity Coordinates (CIE 1931) / -- / Red x / 0.590 / 0.640 / 0.690 / -<br>Red y / 0.295 / 0.345 / 0.395<br>Green x / 0.275 / 0.325 / 0.375<br>Green y / 0.571 / 0.621 / 0.671<br>Blue x / 0.100 / 0.150 / 0.200<br>Blue y / 0.020 / 0.070 / 0.120<br>White x / 0.260 / 0.310 / 0.360<br>White y / 0.270 / 0.320 / 0.370<br>Color Gamut / % / - / - / 70 / - / - |
| | | | | |
| | | | | |

# 1. Operating Precautions

1) Since front polarizer is easily damaged, please be cautious and not to scratch it.
2) Be sure to turn off power supply when inserting or disconnecting from input connector.
3) Wipe off water drop immediately. Long contact with water may cause discoloration or spots.
4) When the panel surface is soiled, wipe it with absorbent cotton or soft cloth.
5) Since the panel is made of glass, it may be broken or cracked if dropped or bumped on hard surface.
6) To avoid ESD (Electro Static Discharde) damage, be sure to ground yourself before handling TFT-LCD Module.
7) Do not open nor modify the module assembly.
8) Do not press the reflector sheet at the back of the module to any direction.
9) In case if a module has to be put back into the packing container slot after it was taken out from the container, do not press the center of the LED light bar edge. Instead, press at the far ends of the LED light bar edge softly. Otherwise the TFT Module may be damaged.
10) At the insertion or removal of the Signal Interface Connector, be sure not to rotate nor tilt the Interface Connector of the TFT Module.
11) TFT-LCD Module is not allowed to be twisted & bent even force is added on module in a very short time. Please design your display product well to avoid external force applying to module by end-user directly.
12) Small amount of materials without flammability grade are used in the TFT-LCD module. The TFT-LCD module should be supplied by power complied with requirements of Limited Power Source (IEC60950 or UL1950), or be applied exemption.
13) Severe temperature condition may result in different luminance, response time and lamp ignition voltage.
14) Continuous operating TFT-LCD display under low temperature environment may accelerate lamp exhaustion and reduce luminance dramatically.
15) The data on this specification sheet is applicable when LCD module is placed in landscape position.
16) Continuous displaying fixed pattern may induce image sticking. It’s recommended to use screen saver or shuffle content periodically if fixed pattern is displayed on the screen.
17) Highlight model usage, please be careful the high temperature burn prevention.

# 2. General Description

G190ETN01.6 is a Color Active Matrix Liquid Crystal Display composed of a TFT-LCD panel, a driver circuit, and a backlight system. The screen format is intended to support the SXGA (1280(H) x 1024(V)) screen and 16.7M colors (RGB 6-bits + HiFRC data). All input signals are 2-channel LVDS interface.

## 2.1 Display Characteristics

The following items are characteristics summary on the table under 25 ºC condition:

| **Items** | **Unit** | **Specifications** |
|---|---|---|
| Screen Diagonal | [inch] | 19” |
| Active Area | [mm] | 376.32 (H) x 301.06 (V) |
| Resolution | | 1280(x3) x 1024 |
| Pixel Pitch | [mm] | 0.294 (per one triad) x 0.294 |
| Pixel Arrangement | | R.G.B. Vertical Stripe |
| Display Mode | | TN |
| Nominal Input Voltage VDD | [Volt] | +5.0 V |
| Power Consumption | [Watt] | 37.7W<br>LCD : 6W(max)<br>BLU Power : 31.7W(max) |
| Weight | [Grams] | Max 1800 |
| Physical Size | [mm] | 396 (H) x 324.26 (V) x 15.3 (D) (Typ) |
| Electrical Interface | | Dual channel LVDS |
| Surface Treatment | | Anti- Reflection, Hardness 2H |
| Support Color | | 16.7M colors (RGB 6-bit + Hi_FRC) |
| Temperature Range<br>Operating<br>Storage (Non-Operating) | <br>[ºC]<br>[ºC] | <br>-30 to +70<br>-30 to +70 |
| RoHS Compliance | | Yes |

## 2.2 Optical Characteristics

The optical characteristics are measured under stable conditions at 25 °C (Room Temperature):

| Item | Unit | Conditions | | Min. | Typ. | Max. | Note |
|---|---|---|---|---|---|---|---|
| White Luminance | cd/m$^2$ | $I_{LED}$=75mA(center point) | | 1280 | 1600 | - | 1 |
| Uniformity | % | 9 points | | 75 | 80 | - | 2,3 |
| Contrast Ratio | -- | | | 600 | 1000 | - | 4 |
| Response Time | msec | Rising | | - | - | - | 5 |
| | | Falling | | - | - | - | |
| | | Rising + Falling | | - | 10 | 20 | |
| Viewing Angle | degree | Horizontal CR >= 10 | (Right) | 75 | 85 | - | 6 |
| | | | (Left) | 75 | 85 | - | |
| | | Vertical CR >= 5 | (Upper) | 70 | 80 | - | |
| | | | (Lower) | 70 | 80 | - | |
| Color / Chromaticity Coordinates (CIE 1931) | -- | Red x | | 0.590 | 0.640 | 0.690 | |
| | | Red y | | 0.295 | 0.345 | 0.395 | |
| | | Green x | | 0.275 | 0.325 | 0.375 | |
| | | Green y | | 0.571 | 0.621 | 0.671 | |
| | | Blue x | | 0.100 | 0.150 | 0.200 | |
| | | Blue y | | 0.020 | 0.070 | 0.120 | |
| | | White x | | 0.260 | 0.310 | 0.360 | |
| | | White y | | 0.270 | 0.320 | 0.370 | |
| Color Gamut | % | | | | 70 | | |

Note 1: Measurement method

Equipment Pattern Generator, Power Supply, Digital Voltmeter, Luminance meter (SR_3 or equivalent)

Aperture 1∘ with 50cm viewing distance

Test Point Center

Environment *< 1 lux*

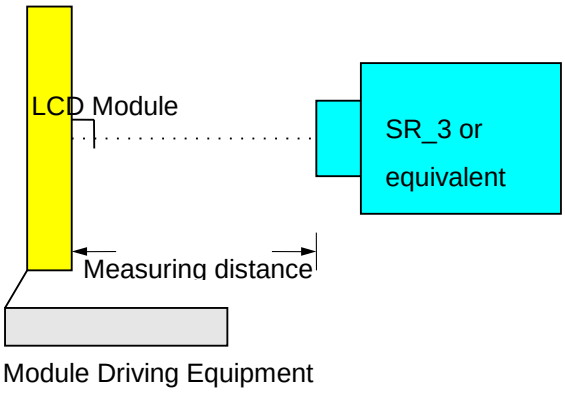

Note 2: Definition of 9 points position

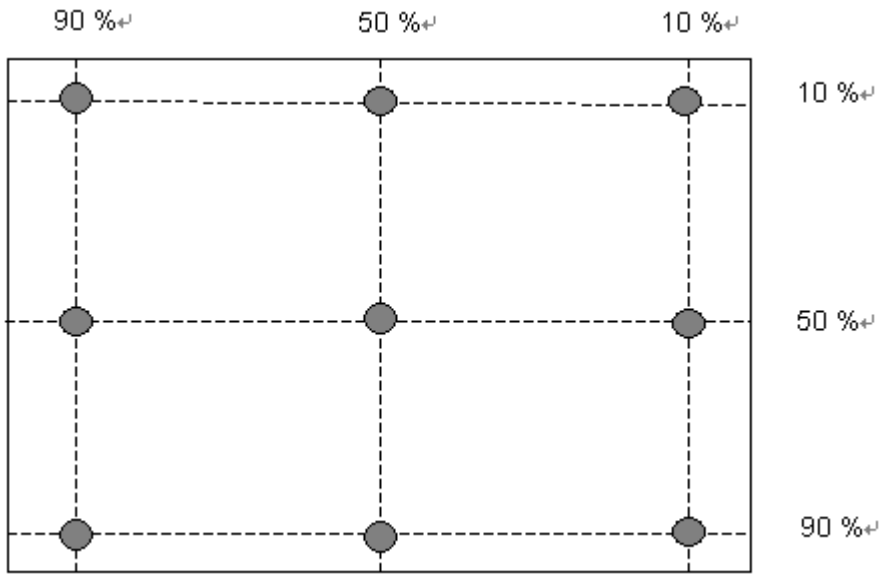


Note 3: The luminance uniformity of 9 points is defined by dividing the minimum luminance values by the maximum test point luminance

$$\text{Uniformity} \quad \frac{\text{Minimum Brightness of nine points}}{\text{Maximum Brightness of nine points}}$$

Note 4: Definition of contrast ratio (CR):

$$\text{Contrast ratio (CR)} = \frac{\text{Brightness on the “White” state}}{\text{Brightness on the “Black” state}}$$

Note 5: Definition of response time:

The output signals of photo detector are measured when the input signals are changed from “White” to “Black” (falling time) and from “Black” to “White” (rising time), respectively. The response time interval is between 10% and 90% of amplitudes. Please refer to the figure as below.

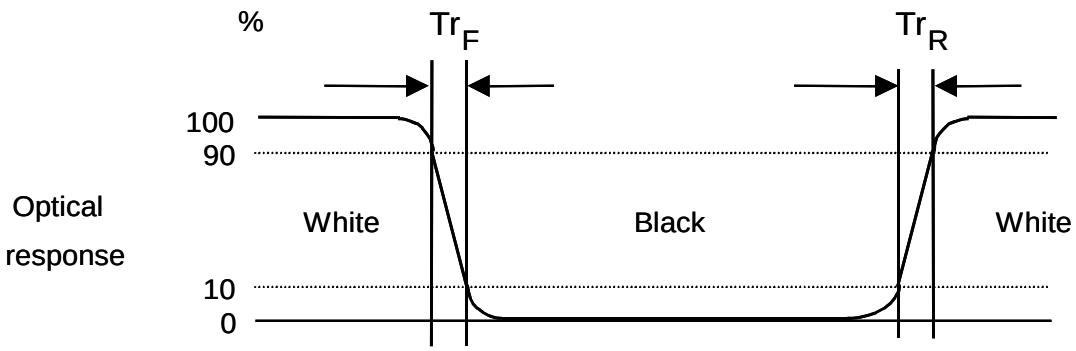

Note 6: Definition of viewing angle

Viewing angle is the measurement of contrast ratio ≧10, at the screen center, over a 180° horizontal and 180° vertical range (off-normal viewing angles). The 180° viewing angle range is broken down as below: 90° (θ) horizontal left and right, and 90° (Φ) vertical high (up) and low (down). The measurement direction is typically perpendicular to the display surface with the screen rotated to its center to develop the desired measurement viewing angle.

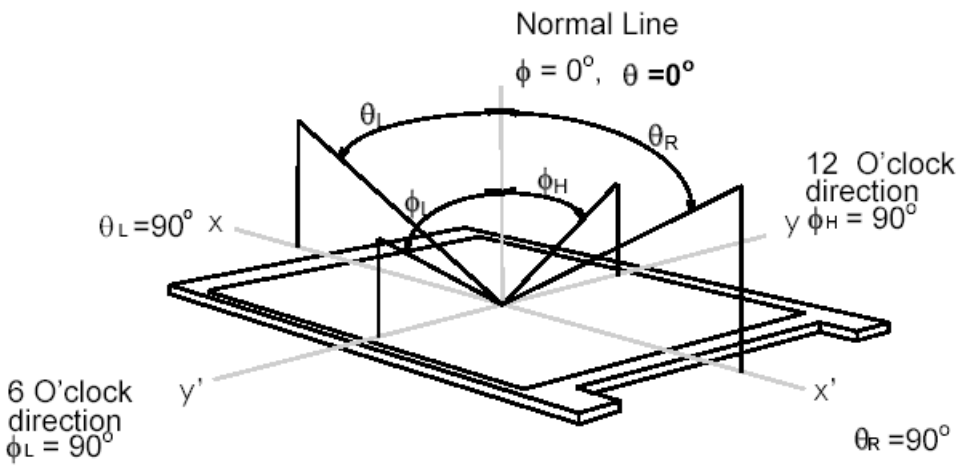

## 3. Functional Block Diagram

The following diagram shows the functional block of the 19.0 inch color TFT/LCD module:

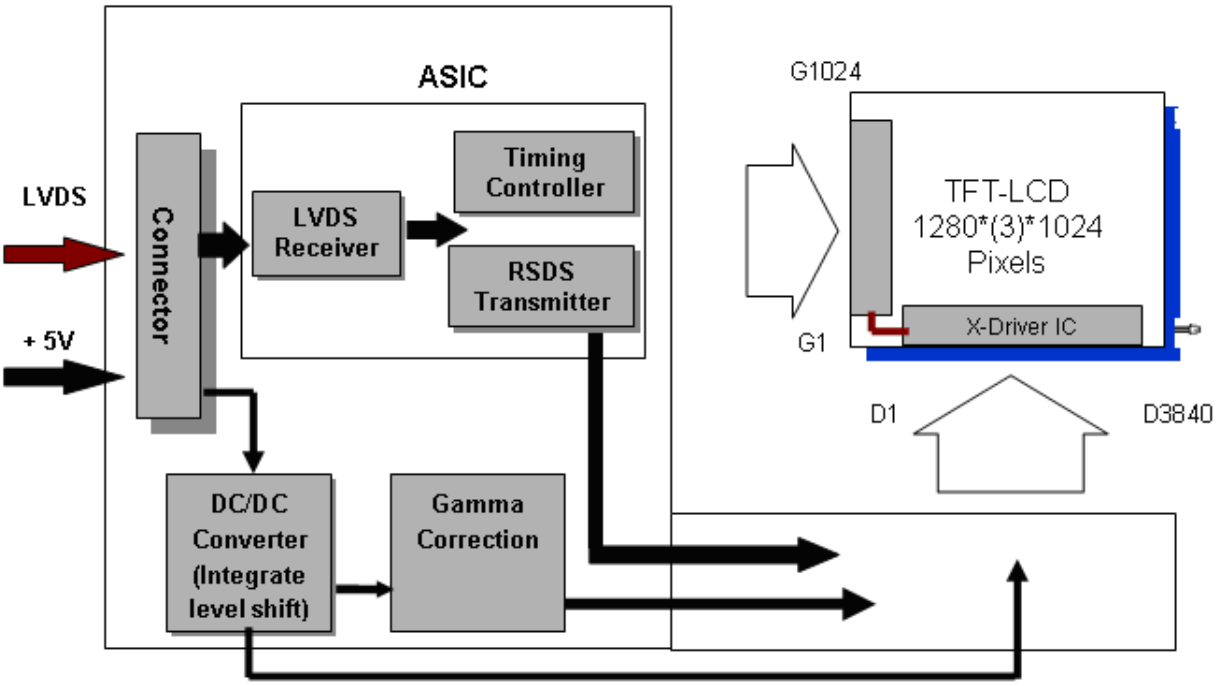

# 4. Absolute Maximum Ratings

## 4.1 Absolute Ratings of TFT LCD Module

| Item | Symbol | Min | Max | Unit |
|---|---|---|---|---|
| Logic/LCD drive Voltage | Vin | -0.3 | +6.0 | [Volt] |

Note: With in Ta (25 °C)

## 4.2 Absolute Ratings of Environment

| Item | Symbol | Min | Max | Unit |
|---|---|---|---|---|
| Operating Temperature | TOP | -30 | +70 | [°C] |
| Operation Humidity | HOP | 5 | 95 | [%RH] |
| Storage Temperature | TST | -30 | +70 | [°C] |
| Storage Humidity | HST | 5 | 95 | [%RH] |

Note: Maximum Wet-Bulb should be 39 °C and no condensation.

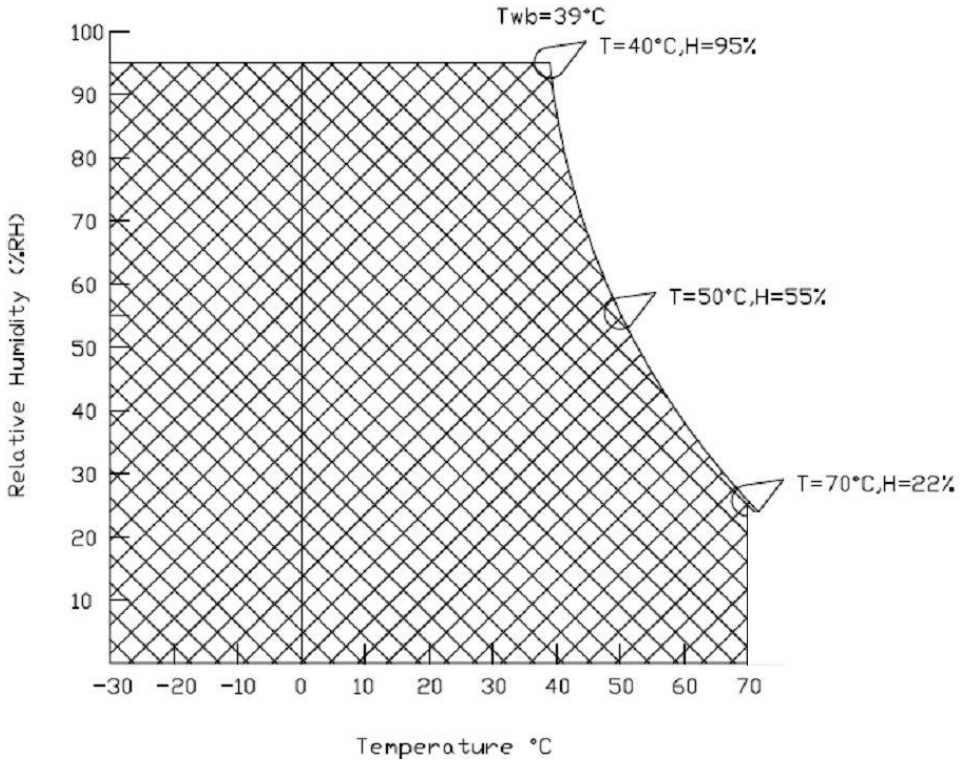

# 5. Electrical Characteristics

## 5.1 TFT LCD Module

### 5.1.1 Power Specification

Input power specifications are shown as follows ;

| Symbol | Parameter | Min | Typ | Max | Units | Remark |
|---|---|---|---|---|---|---|
| VDD | Logic/LCD Drive Voltage | 4.5 | 5.0 | 5.5 | [Volt] | +/-10% |
| IDD | Input Current | - | 1 | 1.2 | [A] | VDD= 5.0V, All Black Pattern At 75Hz |
| PDD | VDD Power | - | 5 | 6 | [Watt] | VDD= 5.0V, All Black Pattern At 75Hz |
| IRush | Inrush Current | - | - | 3.0 | [A] | Note 1 |
| VDDrp | Allowable Logic/LCD Drive Ripple Voltage | - | - | 100 | [mV] p-p | VDD= 5.0V, All Black Pattern At 75Hz |

Note 1: Measurement condition:

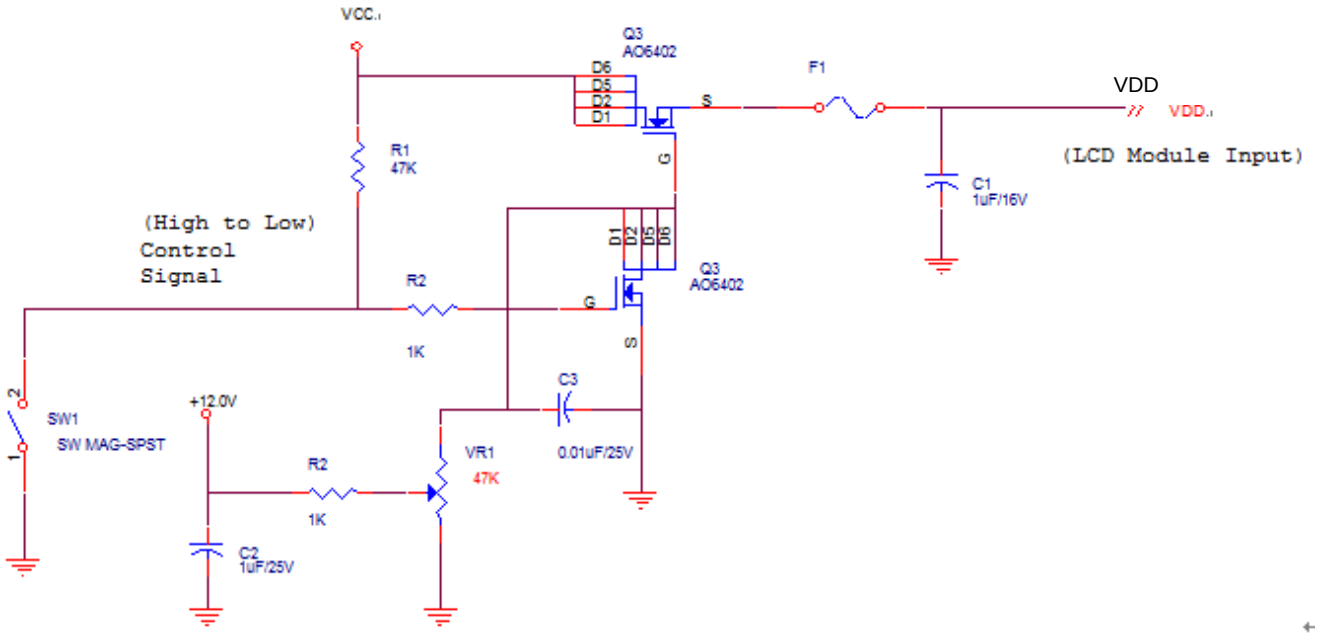


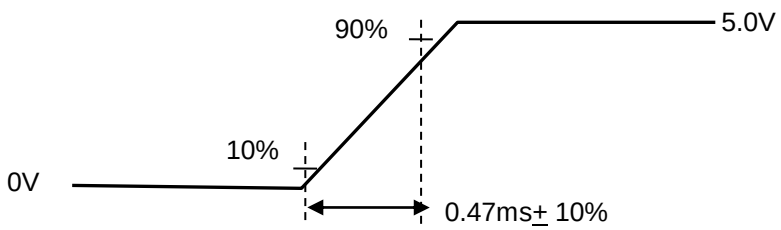


**VDD rising time**

### 5.1.2 LVDS DC Signal Electrical Characteristics

Please refer to specifications of SN75LVDS82DGG (Texas Instruments) in detail.

| Symbol | Item | Min. | Typ. | Max. | Unit | Remark |
|---|---|---|---|---|---|---|
| VTH | Differential Input High Threshold | - | - | +100 | [mV] | VCM=1.2V, ***Note*** |
| VTL | Differential Input Low Threshold | -100 | - | - | [mV] | VCM=1.2V, ***Note*** |
| \| VID \| | Input Differential Voltage | 100 | 400 | 600 | [mV] | ***Note*** |
| VICM | Differential Input Common Mode Voltage | +1.0 | +1.2 | +1.5 | [V] | VTH/VTL=+-100mV, ***Note*** |

Input signals shall be low or Hi-Z state when VDD is off.

Note: LVDS Signal Waveform.

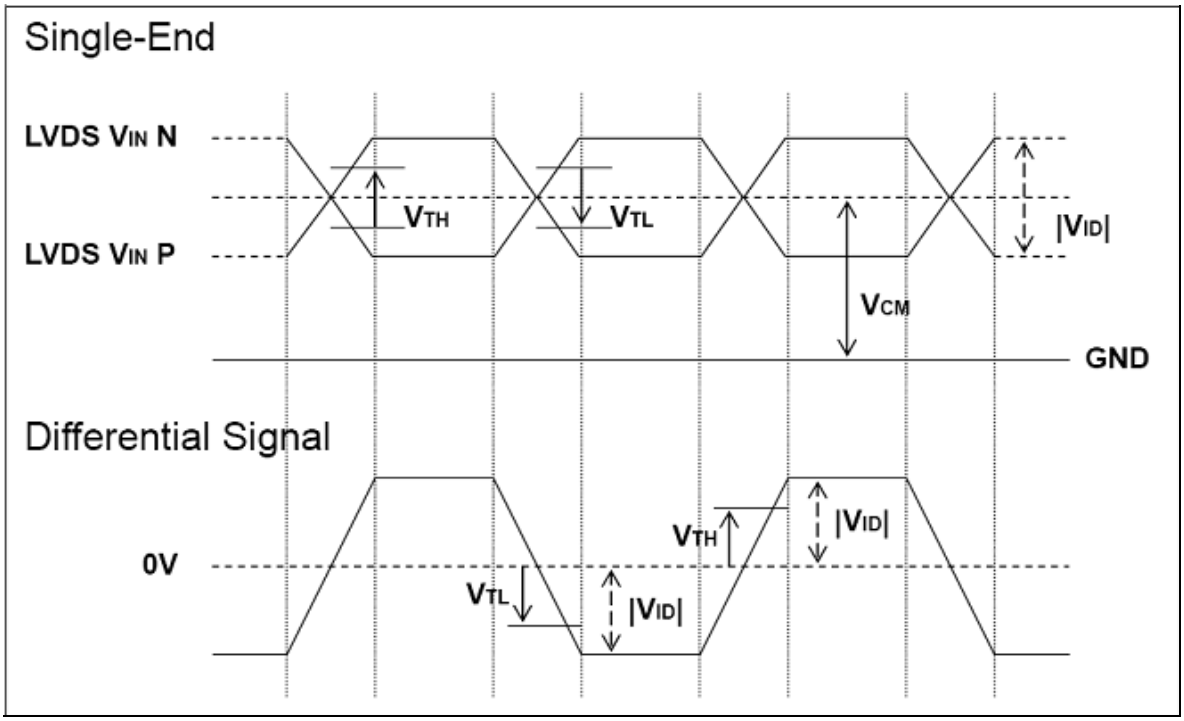

## 5.2 Backlight Unit

### 5.2.1 LED Backlight Unit : Driver Connector

Physical interface is described as for the connector on module. These connectors are capable of accommodating the following signals and will be following components.

| **Connector Name / Designation** | **Lamp Connector** |
|---|---|
| Manufacturer | STM |
| Connector Model Number | MS240110RHD |
| Mating Model Number | P240110H or compatible |

| Pin No. | Symbol | Description |
|---|---|---|
| 1 | Vcc | 12V |
| 2 | Vcc | 12V |
| 3 | Vcc | 12V |
| 4 | Vcc | 12V |
| 5 | GND | GND |
| 6 | GND | GND |
| 7 | GND | GND |
| 8 | GND | GND |
| 9 | Enable | 3.3V-On / 0V-Off |
| 10 | Dimming | PWM Dimming |

### 5.2.2 LED characteristics

Following characteristics are measured under a stable condition using an inverter at 25℃ (Room Temperature):

| Symbol | Parameter | Min | Typ | Max | Units | Condition |
|---|---|---|---|---|---|---|
| PLED | Backlight Power Consumption | - | 23.4 | 27 | [Watt] | VCC=12V ,100% Dimming |
| LTLED | LED Life-Time | 50000 | - | - | Hour | Ta = 25ºC |

**Note 1:** Calculator value for reference $P_{LED}$ = $V_F$ (Normal Distribution) * $I_F$ (Normal Distribution) / Efficiency

**Note 2:** The LED life-time define as the estimated time to 50% degradation of initial luminous.

### 5.2.3 Backlight input signal characteristics

| Symbol | Parameter | Min | Typ | Max | Unit | Remark |
|---|---|---|---|---|---|---|
| Vcc | Input Voltage | 10.8 | 12 | 13.2 | Volt | |
| Ivcc | Input Curent | - | 2.3 | - | A | VCC=12V, Ta=25 ℃ at 100% |
| PLED | Power Consumption | - | 27.6 | 31.7 | Watt | VCC=12V, Ta=25 ℃ at 100% |
| Inrush | Inrush Current | - | - | 5 | A | |
| VLED on/off | On Control Voltage | 2 | 3.3 | 5 | Volt | Back light on/off |
| | Off Control Voltage | 0 | - | 0.6 | Volt | |
| EPWM | PWM Dimming Frequency | 200 | - | 20K | Hz | |
| | High Voltage | 2 | 3.3 | 5 | Volt | |
| | Low Voltage | 0 | - | 0.6 | Volt | |
| | Dimming Duty 200~5K | 5 | | 100 | % | |
| | Dimming Duty 5K~20K | 15 | | 100 | % | |
| $I_F$ | LED Forward Current | - | 65 | | mA | Ta = 25°C (per string) |

Note 1: Ta means ambient temperature of TFT-LCD module.

Note 2: If this module is driven at high ambient temperature & humidity condition. The operating life will be reduced.

Note 3: Operating life means brightness goes down to 50% initial brightness. Min. operating life time is estimated data.

### 5.2.4 Backlight Driver Board Outline

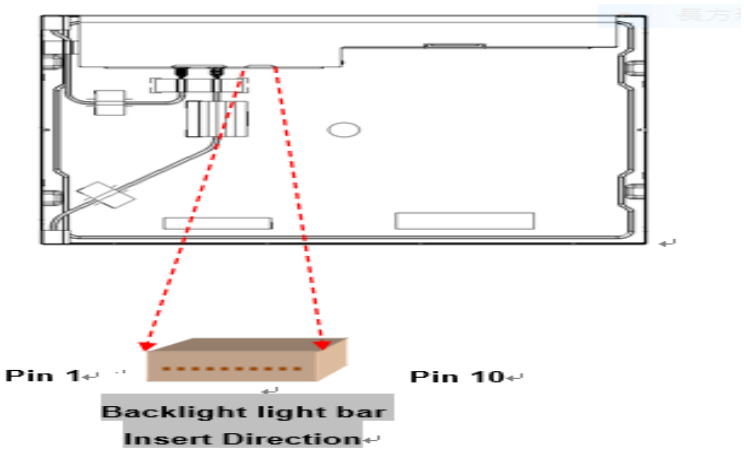

# 6. Signal Characteristic

## 6.1 Pixel Format Image

Following figure shows the relationship between input signal and LCD pixel format.

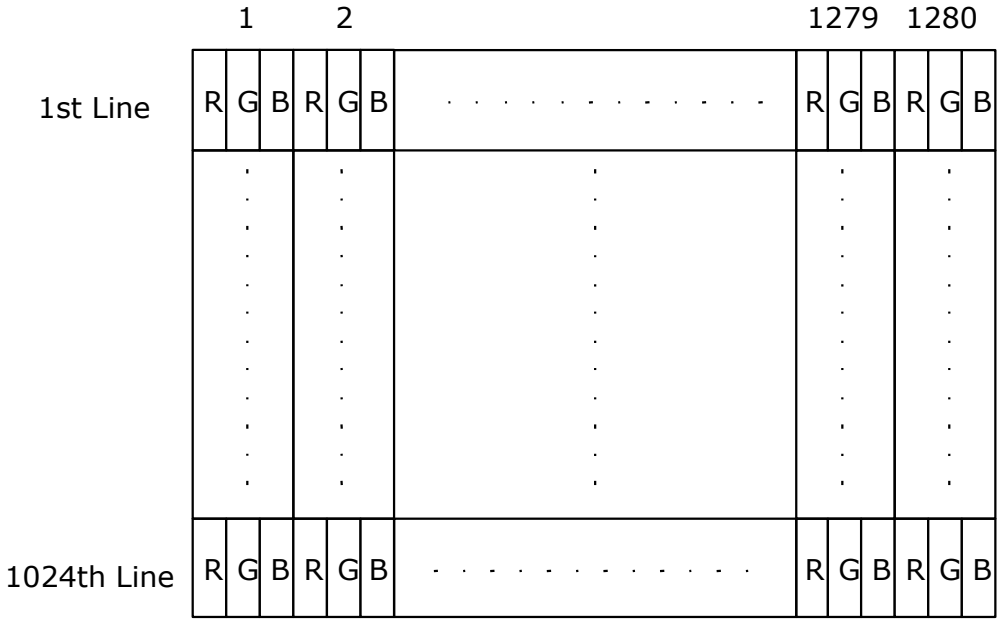


## 6.2 Scanning Direction

The following figures show the image seen from the front view. The arrow indicates the direction of scan.

Fig. 1 Normal scan (Pin4, DPS = Low or NC)

## 6.3 Signal Description

The module uses a LVDS receiver embedded in AUO's ASIC. LVDS is a differential signal technology for LCD interface and a high-speed data transfer device.

### 6.3.1 TFT LCD Module: LVDS Connector

| Connector Name / Designation | Signal Connector |
|---|---|
| Manufacturer | JAE |
| Connector Model Number | FI-XB30SSRLA-HF16-R3500 |
| Adaptable Plug | FI-X30HL or Compatible<br>FI-X30C-NPB or Compatible |

The module using one LVDS receiver SN75LVDS82(Texas Instruments). LVDS is a differential signal technology for LCD interface and high speed data transfer device. LVDS transmitters shall be SN75LVDS83(negative edge sampling). The first LVDS port(RxOxxx) transmits odd pixels while the second LVDS port(RxExxx) transmits even pixels.

| Pin no | Symbol | Function | Remark |
|---|---|---|---|
| 1 | RxOIN0- | Negative LVDS differential data input (Odd data) | |
| 2 | RxOIN0+ | Positive LVDS differential data input (Odd data) | |
| 3 | RxOIN1- | Negative LVDS differential data input (Odd data) | |
| 4 | RxOIN1+ | Positive LVDS differential data input (Odd data) | |
| 5 | RxOIN2- | Negative LVDS differential data input (Odd data, DSPTMG) | |
| 6 | RxOIN2+ | Positive LVDS differential data input (Odd data, DSPTMG) | |
| 7 | GND | Power Ground | |
| 8 | RxOCLKIN- | Negative LVDS differential clock input (Odd clock) | |
| 9 | RxOCLKIN+ | Positive LVDS differential clock input (Odd clock) | |
| 10 | RxOIN3- | Negative LVDS differential data input (Odd data) | |
| 11 | RxOIN3+ | Positive LVDS differential data input (Odd data) | |
| 12 | RxEIN0- | Negative LVDS differential data input (Even data) | |
| 13 | RxEIN0+ | Positive LVDS differential data input (Even data) | |
| 14 | GND | Power Ground | |
| 15 | RxEIN1- | Positive LVDS differential data input (Even data) | |
| 16 | RxEIN1+ | Negative LVDS differential data input (Even data) | |
| 17 | GND | Power Ground | |
| 18 | RxEIN2- | Negative LVDS differential data input (Even data) | |
| 19 | RxEIN2+ | Positive LVDS differential data input (Even data) | |
| 20 | RxECLKIN- | Negative LVDS differential clock input (Even clock) | |
| 21 | RxECLKIN+ | Positive LVDS differential clock input (Even clock) | |
| 22 | RxEIN3- | Negative LVDS differential data input (Even data) | |

| | | | |
|---|---|---|---|
| 23 | RxEIN3+ | Positive LVDS differential data input (Even data) | |
| 24 | GND | Power Ground | |
| 25 | GND | NC | |
| 26 | GND | NC | |
| 27 | GND | NC | |
| 28 | POWER | Power +5V | |
| 29 | POWER | Power +5V | |
| 30 | POWER | Power +5V | |

Note 1: Input Signals shall be in low status when VDD is off.

Note 2: High stands for “3.3V”, Low stands for “0V”, NC means “No Connection”.

Note 3: RSV means “Reserved”.

Note 4: “Power Ground” stands for 0V.

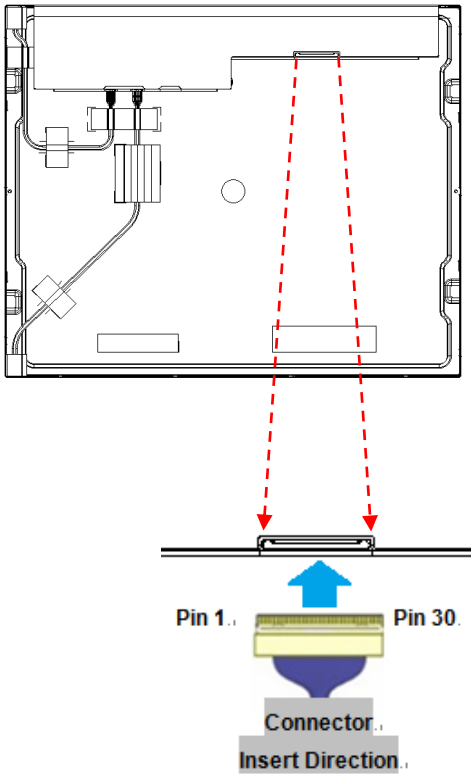


Note1: 30pin start from left side of connector. (Face up)

Note2: Input signals shall be low or High-impedance state when VDD is off.

## 6.4 The Input Data Format

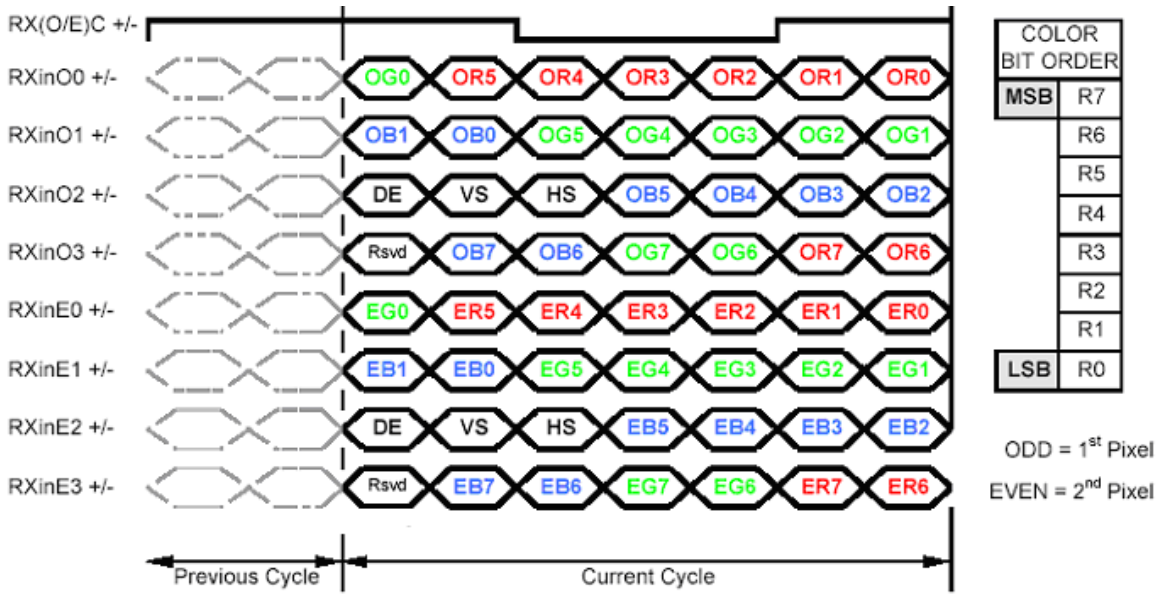


Note1: Normally, DE, VS, HS on EVEN channel are not used.
Note2: Please follow PSWG.
Note3: 8-bit in

## 6.5 Interface Timing

### 6.5.1 Timing Characteristics

| Signal | | Symbol | Min. | Typ. | Max. | Unit |
|---|---|---|---|---|---|---|
| Clock | Period | Tclk | 22.2 | 18.52 | 14.81 | ns |
| | Frequency | Freq. | 44 | 54 | 67.5 | MHz |
| Vertical Section | Period | $T_V$ | 1032 | 1066 | 1150 | $T_{Line}$ |
| | Active | $T_{VD}$ | 1024 | 1024 | 1024 | |
| | Blanking | $T_{VB}$ | 8 | 42 | 126 | |
| Horizontal Section | Period | $T_H$ | 780 | 844 | 2047 | $T_{Clock}$ |
| | Active | $T_{HD}$ | 640 | 640 | 640 | |
| | Blanking | $T_{HB}$ | 140 | 204 | - | |
| Frame Rate | | F | 49 | 60 | 75 | Hz |

Note : DE mode only.

### 6.5.2 Input Timing Diagram

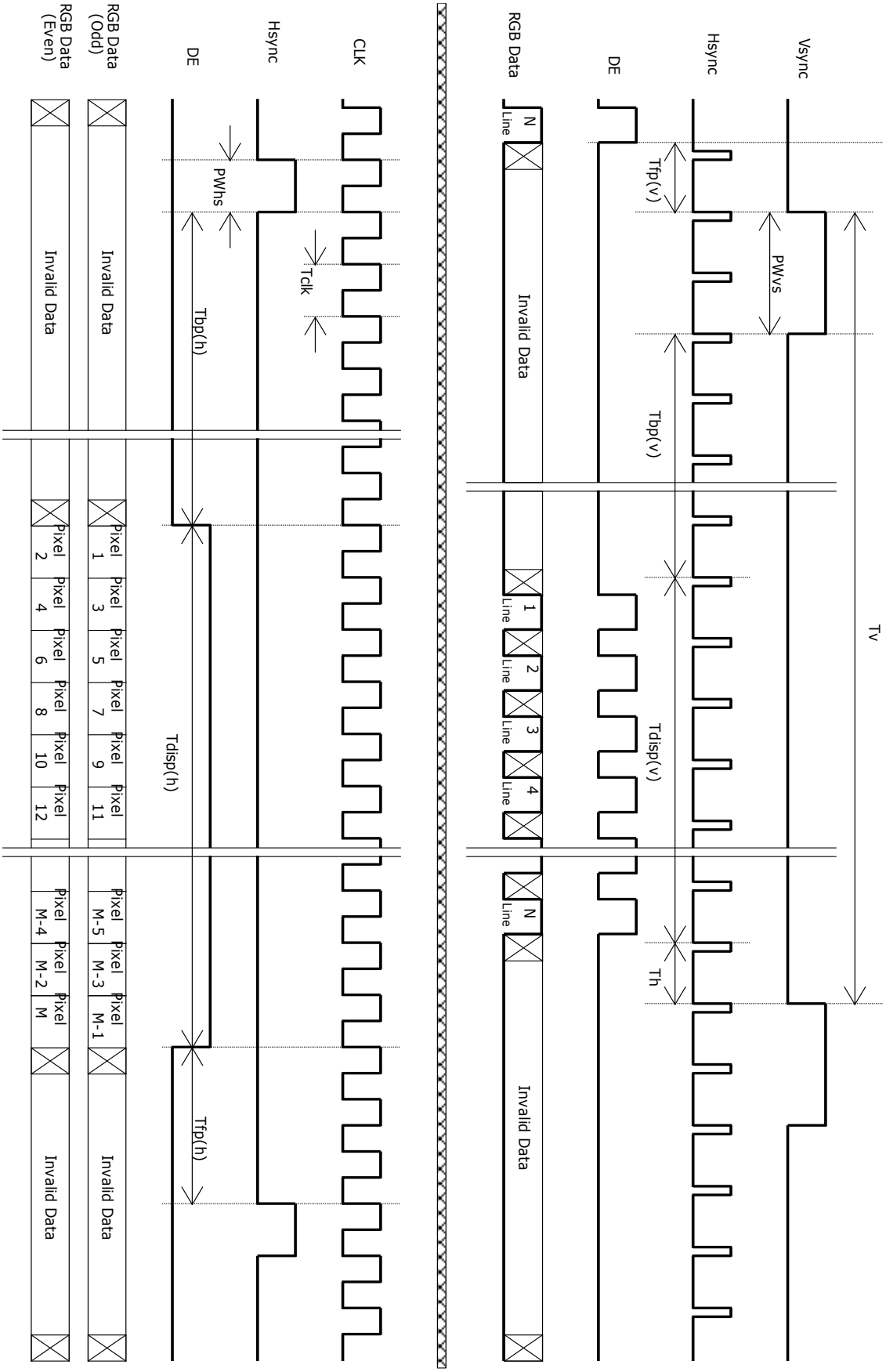

## 6.6 Power ON/OFF Sequence

VDD power and lamp on/off sequence are as follows. Interface signals are also shown in the chart. Signals from any system shall be Hi-Z state or low level when VDD is off.

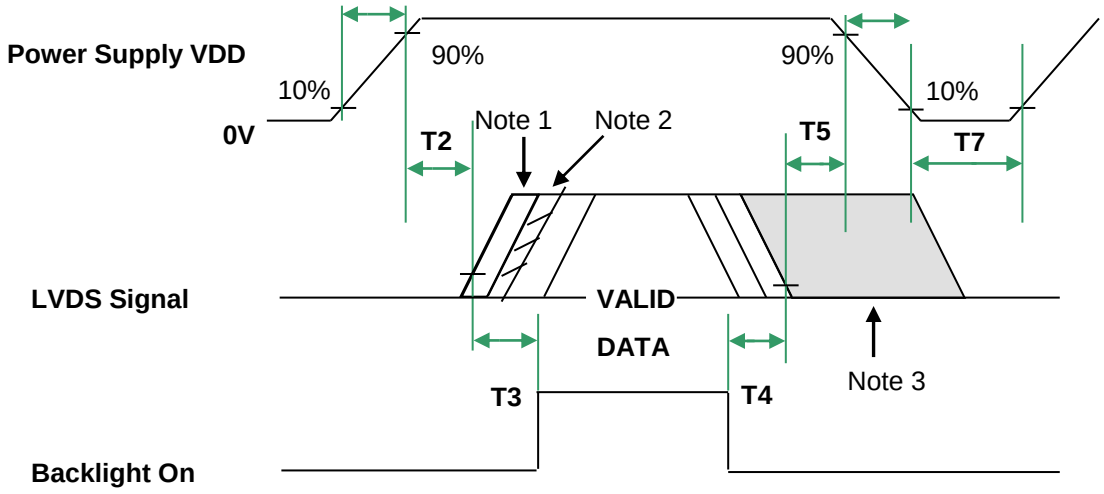


Note1: insert a white pattern 360ms

Note2: insert a black pattern

Note3: insert a white pattern after valid data and last until VDD falls to 10%.

Note4: when AC on/off, timing rule of logo power on/off is the same as above.

**Power ON/OFF sequence timing**

| Parameter | Value | | | Units |
|---|---|---|---|---|
| | Min. | Typ. | Max. | |
| T1 | 0.5 | - | 10 | [ms] |
| T2 | 0 | 40 | 50 | [ms] |
| T3 | 500 | - | - | [ms] |
| T4 | 300 | - | - | [ms] |
| T5 | 40 | 1500 | - | [ms] |
| T6 | - | - | - | [ms] |
| T7 | 1000 | - | - | [ms] |

The above on/off sequence should be applied to avoid abnormal function in the display. Please make sure to turn off the power when you plug the cable into the input connector or pull the cable out of the connector.

## 7. Reliability Test Criteria

| Items | Required Condition | Note |
|---|---|---|
| Temperature Humidity Bias (THB) | Ta= 50℃, 80%RH, 240hours | |
| High Temperature Operation (HTO) | Ta= 70℃, 240hours | 3 |
| Low Temperature Operation (LTO) | Ta= -30℃, 240hours | |
| High Temperature Storage (HTS) | Ta= 70℃, 240hours | 3 |
| Low Temperature Storage (LTS) | Ta= -30℃, 240hours | |
| Vibration Test (Non-operation) | Acceleration: 1.5 Grms<br>Wave: Random<br>Frequency: 10 – 200 Hz<br>Sweep: 30 Minutes each Axis (X, Y, Z) | |
| Shock Test (Non-operation) | Acceleration: 50 G<br>Wave: Half-sine<br>Active Time: 20 ms<br>Direction: ±X, ±Y, ±Z (one time for each Axis) Axis) | |
| Thermal Shock Test (TST) | -20℃/30min, 60℃/30min, 50 cycles | |
| ESD (Electro-Static Discharge) | Contact Discharge: ± 8KV, 150pF(330Ω ) 1sec, 9 points, 25 times/ point. | 1 |
| | Air Discharge: ± 15KV, 150pF(330Ω ) 1sec, 9 points, 25 times/ point. | |

Note1:

According to EN61000-4-2, ESD class B: Some performance degradation allowed. No data lost Self-recoverable. No hardware failures.

Note2:

- Water condensation is not allowed for each test items.
- Each test is done by new TFT-LCD module. Don't use the same TFT-LCD module repeatedly for reliability test.
- The reliability test is performed only to examine the TFT-LCD module capability.
- To inspect TFT-LCD module after reliability test, please store it at room temperature and room humidity for 24 hours at least in advance.
- Mura shall be ignored after high temperature reliability test.

Note 3 :

No function failure occurs at HTO and HTS test

# 8. Mechanical Characteristics

## 8.1 LCM Outline Dimension

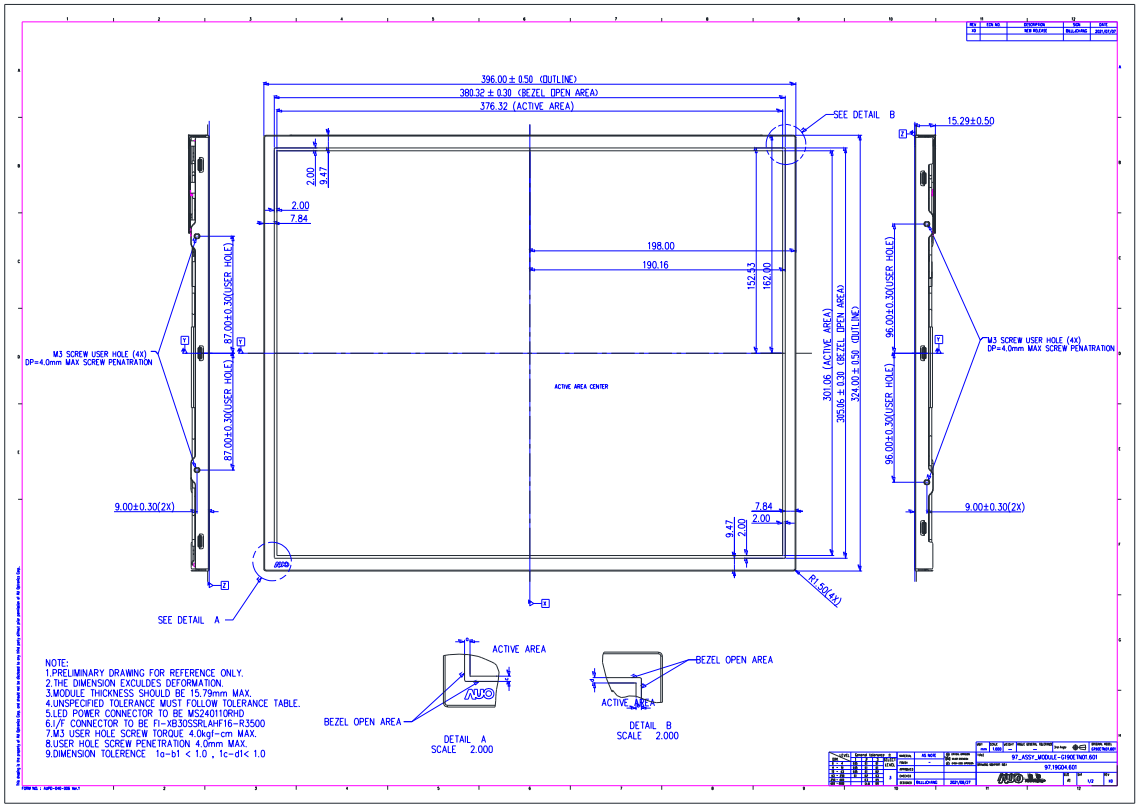


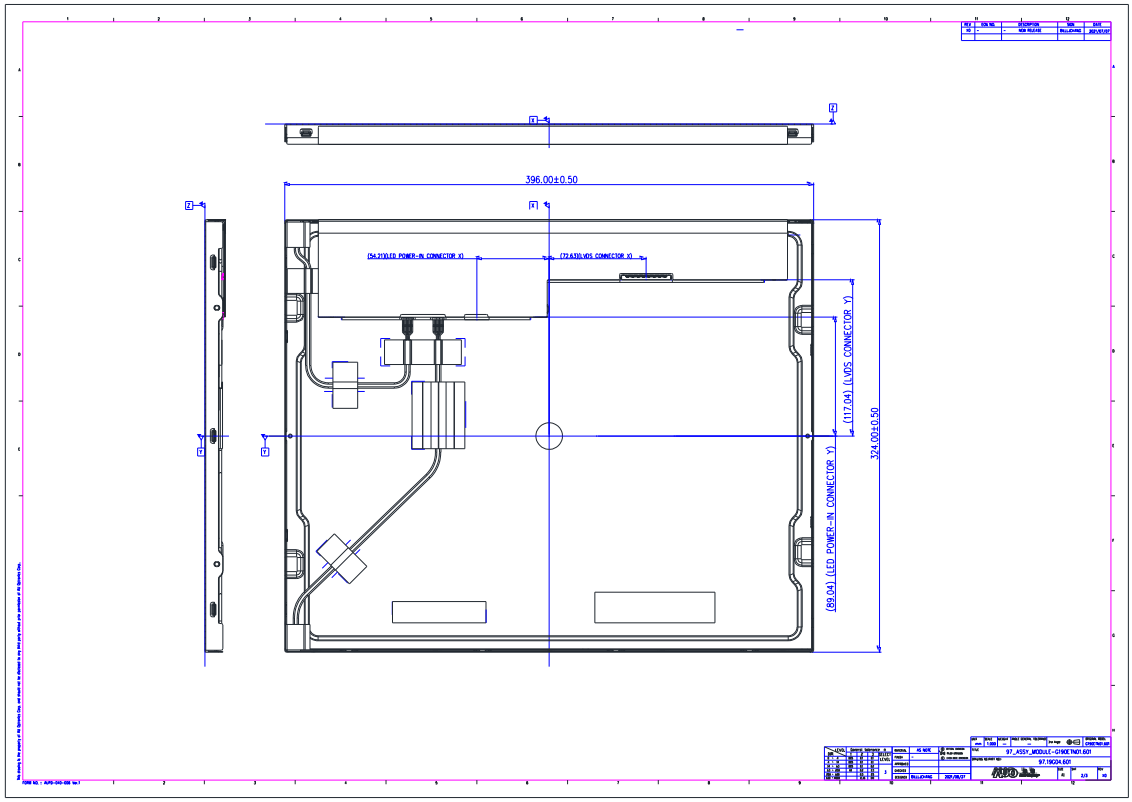

# 9. Label and Packaging

## 9.1 Shipping Label (on the rear side of TFT-LCD display)

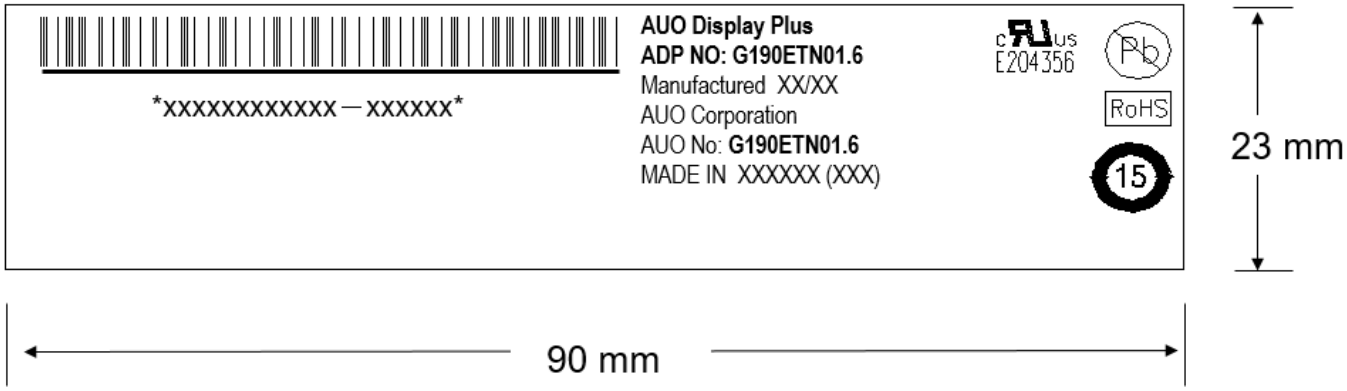


## 9.2 Carton Package

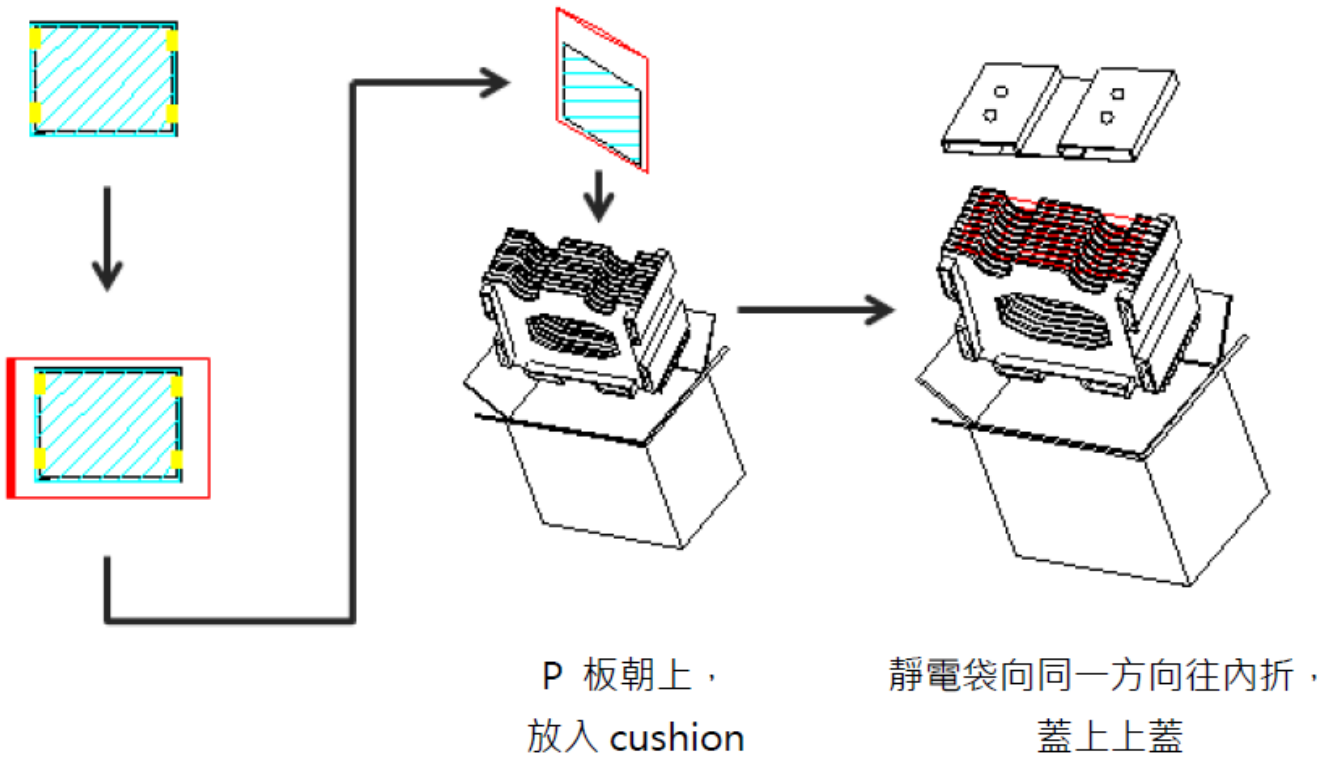


Max capacity：7 modules per carton

Max weight: 14.0 kg per carton

Outside dimension of carton: 476 mm(L)* 274 mm(W)*414 mm(H)

Pallet size： 1150 mm * 980 mm * 132mm

## 9.3 Palletizing Sequence

Box stacked

Module by air：One pallet (2x4) x3 layers，one pallet put 24boxes，total 168pcs module

Module by sea：One pallet (2 *4) *3 layers + One pallet (2 *4) *1 layers，total 224 pcs module
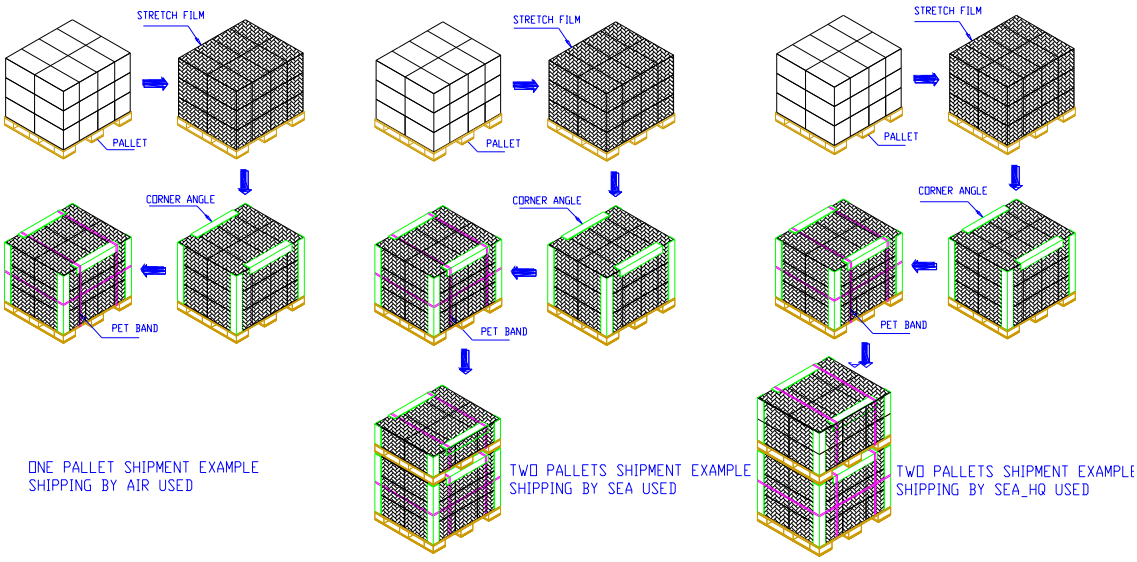
Module by sea_ HQ : One pallet (2 *4) *3 layers + One pallet (2 *4) *2 layers，Total 280 pcs module